Electronic Concepts

"Film Capacitor Innovation without Limits"

LH3 SERIES
Lo-Henry™

INVERTER CAPACITOR

The LH3 Series is designed for next generation inverters. This capacitor has an innovative terminal design to reduce inductance. The integrated mounting flange is also incorporated in the design to withstand a high shock and vibration environment.

FEATURES
- Low ESL – Less than 10nH
- Compact terminal arrangement allowing for smaller bus bar design.
- Low ESR – less than 0.20 mOhms
- High RMS current capability – greater than 400 Arms
- Integrated mounting flange to withstand high shock and vibration environment.

STANDARD CONFIGURATION
- LH30 - Female Terminal

Specification Summary

Capacitance Range
30µF to 1600µF

Capacitance Tolerance
Standard capacitance tolerance is ±10%.
Tolerances of ±5% and ±20% are also available.

Operating Temperature Range
-55°C to +105°C

Enclosure/Construction
Unlytic polypropylene potted in a thermoplastic housing. Terminals are tin plated brass.

Voltage Rating
500 VDC to 2400 VDC

Quality Control
Capacitors are tested 100% for:

- Capacitance
- Tolerance
- Dissipation Factor
- Dielectric withstanding voltage
- Insulation Resistance
- Equivalent Series Resistance (ESR)

Process and inspection data are maintained on file and available upon special request.

Environmental

Parameter	Method	Condition
Vibration	204	D
Shock	213	I
Humidity	106	-
Thermal Shock	107	A
Life	108	F
Reference MIL-STD-202		

Characteristics

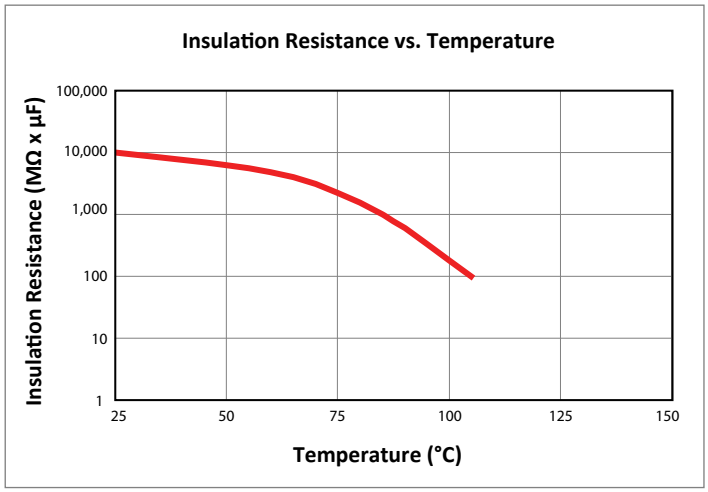

Dielectric Strength
Capacitors withstand a DC potential of 1.3 x rated voltage for one (1) minute without damage or break-down. Test voltage is applied and discharged through a minimum resistance of 100 OHM per volt minimum.

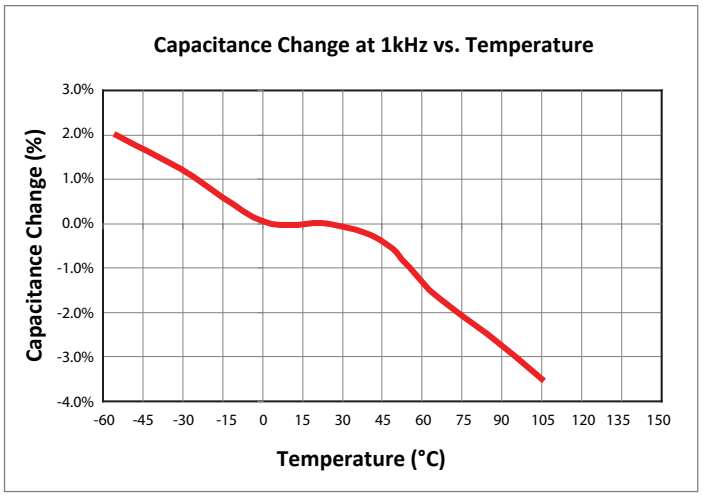

Dissipation Factor
Polypropylene has an intrinsic dissipation factor of less than 2.1x 10-4 over the operating temperature range of -55°C to +105°C and frequencies to 1MHz.

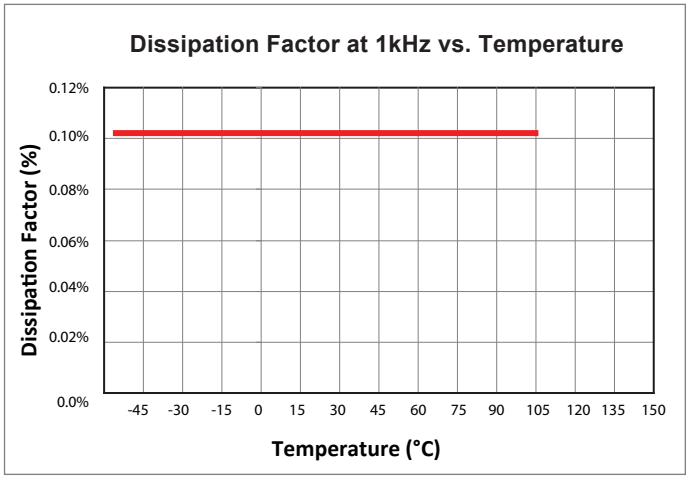

Detail Data

PART NUMBER	VOLTAGE	CAP	"H"	ESR	Rth	ESL	dv/dt	Ipk	Fres	WEIGHT	Rms Current (10kHz)			
	VDC	µF	mm	(Milliohms)	°C/W	(nH)	(v/us)	(AMPS)	(kHz)	(kg)	25°C	55°C	85°C	105°C
LH30BA507	500	500	50	0.20	2.2	8	42	21110	79.6	0.9	408	315	209	50
LH30BA118	500	1100	75	0.39	1.8	9	19	21236	50.6	1.9	330	262	168	40
LH30BA168*	500	1600	100	0.56	1.6	10	14	22187	39.8	2.9	295	234	151	36
LH30BC407	600	400	50	0.23	2.2	8	48	19300	89.0	0.9	395	314	202	48
LH30BC857	600	850	75	0.44	1.8	9	23	19177	57.5	1.9	316	251	161	38
LH30BC128	600	1200	100	0.66	1.6	10	16	19017	45.9	2.9	272	216	139	33
LH30BF327	750	320	50	0.25	2.2	8	54	17370	99.5	0.9	376	299	192	46
LH30BF657	750	650	75	0.51	1.8	9	25	16497	65.8	1.9	290	231	148	35
LH30BF957	750	950	100	0.74	1.6	10	18	16937	51.6	2.9	257	204	131	31
LH30BL227	900	220	50	0.28	2.2	8	70	15428	120.0	0.9	352	280	180	43
LH30BL557	900	550	75	0.57	1.8	9	31	15510	75.0	1.9	274	217	139	33
LH30BL807	900	800	100	0.79	1.6	10	20	15848	56.3	2.9	250	199	128	31
LH30BM157	1100	150	50	0.35	2.2	8	84	12623	145.3	0.9	316	251	161	38
LH30BM377	1100	370	75	0.64	1.8	9	37	13536	87.2	1.9	262	208	134	32
LH30BM557*	1100	550	100	0.96	1.6	10	24	13074	67.9	2.9	227	180	116	28
LH30BR117	1400	110	50	0.41	2.2	8	105	11534	169.7	0.9	291	231	149	36
LH30BR277	1400	270	75	0.76	1.8	9	41	11137	102.1	1.9	241	192	123	29
LH30BR407	1400	400	100	1.13	1.6	10	28	11094	79.6	2.9	208	166	107	25
LH30BT906	1600	90	50	0.44	2.2	8	112	10098	187.6	0.9	287	228	147	35
LH30BT217	1600	210	75	0.85	1.8	9	47	9900	115.8	1.9	228	181	117	28
LH30BT317	1600	310	100	1.27	1.6	10	32	9826	90.4	2.9	197	156	101	24
LH30BX706	1800	70	50	0.50	2.2	8	126	8836	212.7	0.9	267	212	136	33
LH30BX167	1800	160	75	1.00	1.8	9	53	8486	132.6	1.9	209	166	107	26
LH30BX247	1800	240	100	1.46	1.6	10	36	8558	102.7	2.9	183	145	93	22
LH30CA556	2000	55	50	0.50	2.2	8	180	9009	251.6	0.9	278	221	142	34
LH30CA127	2000	120	75	1.08	1.8	9	65	7797	153.1	1.9	202	160	103	25
LH30CA207	2000	200	100	1.58	1.6	10	40	7924	112.5	2.9	177	141	90	22
LH30CB306	2400	30	50	0.71	2.2	8	216	6486	324.9	0.9	223	177	114	27
LH30CB856	2400	85	75	1.28	1.8	9	78	6628	182.0	1.9	187	148	95	23
LH30CB147	2400	140	100	1.88	1.6	10	48	6656	134.5	2.9	162	129	83	20

*Available at a promotional price

Style

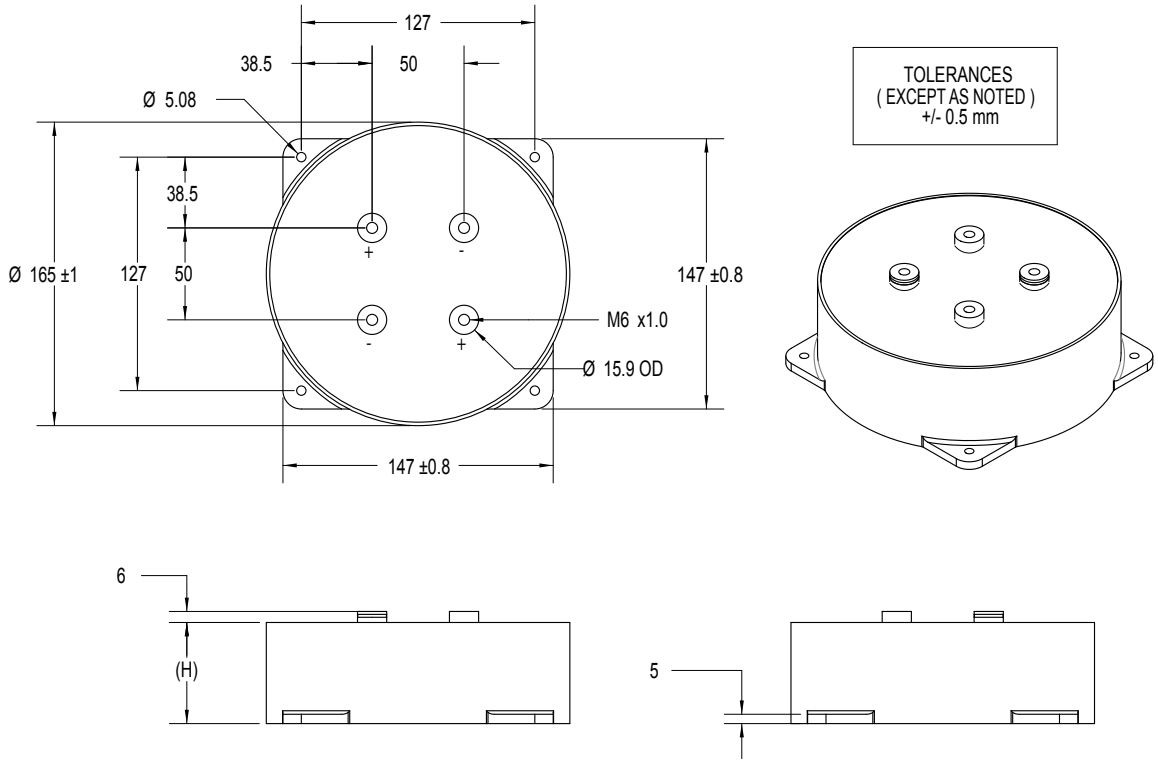

Electronic Concepts

Rev. 5

Additional Information

The UNLYTIC® LH3 series capacitor has been designed utilizing Lo-Henry™ technology. It is a coaxial film technology that produces very low inductance (ESL). With an effort to keep overall system costs down, the LH3 series was designed with a compact terminal layout. It will allow designers to reduce the overall buss bar dimensions.

The capacitor is encapsulated in a specially formulated potting compound that will enhance the overall thermal capabilities of the capacitor. The LH3 series is housed in a high strength thermoplastic designed to withstand high shock and vibration environments.

How to Order

TYPE UNLYTIC® Metallized Polypropylene	→	**LH30**
VOLTAGE DC Voltage Rating: BA = 500 VDC, BC = 600, etc.	→	**BA**
CAPACITANCE IN PICOFARADS The first two digits are significant, the third represents the number of zeros (e.g 157=150,000,000pF)	→	**157**

Marking And Date Code
All capacitors are marked with company initials "EC", corporate logo or EC trademark—in addition to type LH3, capacitance, tolerance, rated DC working voltage and date code. The first two digits of the date code represent the year, the second two digits the week, i.e., 1552 is the 52nd week of 2015, 1502 is the second week of 2015.

Quality Assurance
Major emphasis is placed on quality assurance. EC is an ISO 9001 and AS9100 Certified Company. Raw material inspection and the use of SPC manufacturing procedures assure the highest quality standards. Procedures are fully described in the EC Quality Control Manual. Electronic Concepts will continue to advance the state-of-the-art by utilizing leading edge technology, compact capacitor designs and establishing reliability procedures.

Sales Offices

United States Headquarters
Electronic Concepts, Inc.
526 Industrial Way West
Eatontown, NJ 07724
Tel: 732-542-7880
Fax: 732-542-0524

email: sales@ecicaps.com
website:www.ecicaps.com

Distribution Center
Elcon Sales
542 Industrial Way West
Eatontown, NJ 07724
Tel: 732-380-0405
Fax: 732-380-0409

email: sales@elconsales.com

European Headquarters
Electronic Concepts Europe LTD
IDA Estate
Oughterard
Co. Galway
Ireland
tel: +353-91-552385,552432
fax: +353-91-552387

email: sales@ecicaps.ie
website:www.electronicconcepts.ie